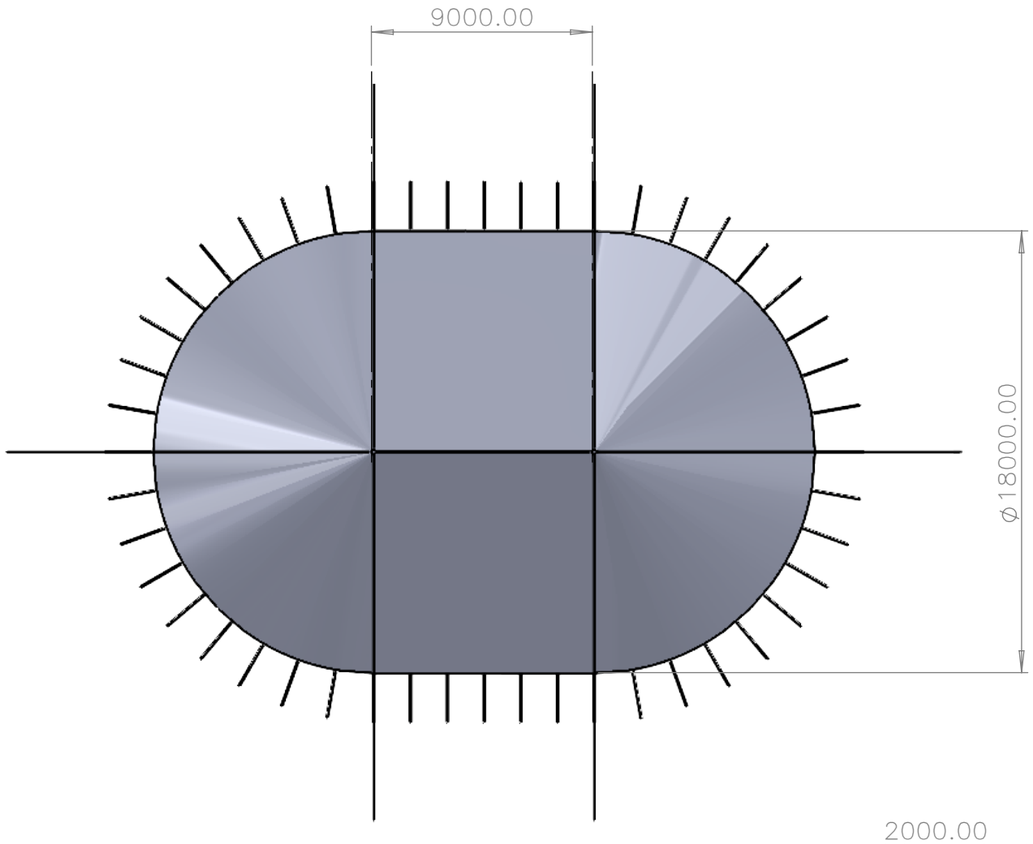

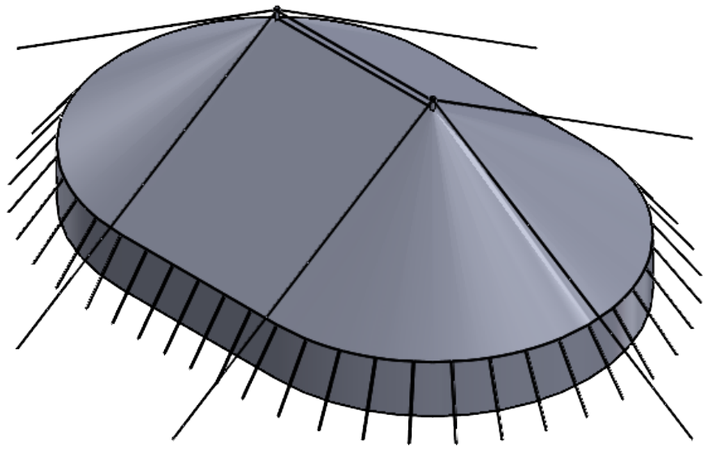

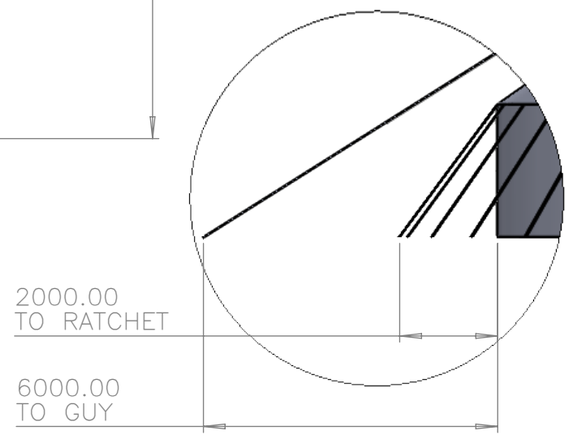

DETAIL A
SCALE 1 : 125

— GUY DETAIL —

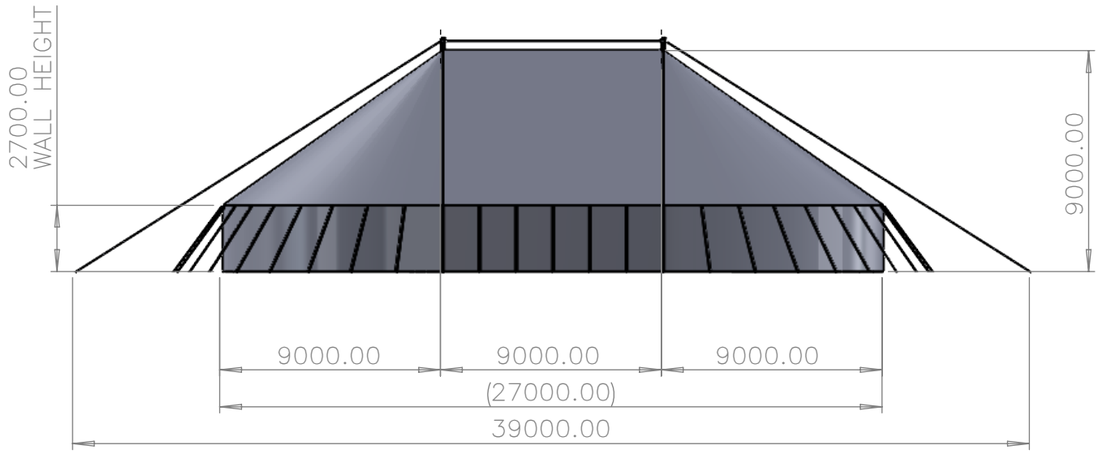

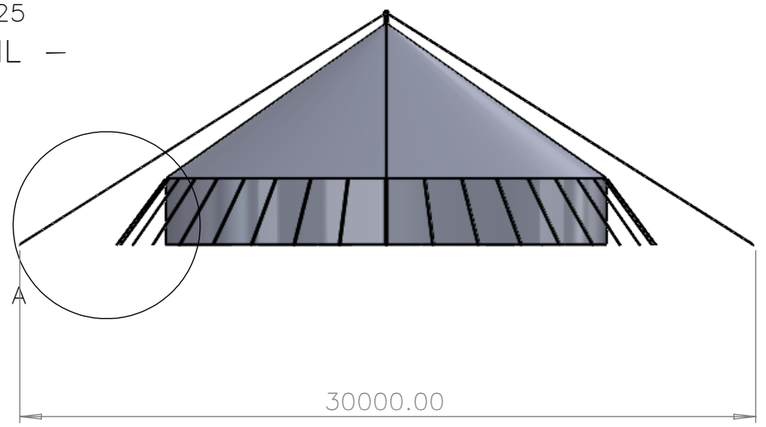

SIZE (m)	SIZE (ft)	No. OF KING POLES	FOOTPRINT (m)	INTERNAL AREA (m)	CAPACITY (STANDING)	CAPACITY (THEATRE STYLE)	CAPACITY (DINING)	NUMBER OF 3m EXITS
27 x 18	89' X 59'	2	31 x 22 (39 x 30 w/ GUYS)	416	832	640	277	TBC

PLEASE NOTE

1. DO NOT SCALE DRAWINGS FOR CONSTRUCTION PURPOSES.
2. ALL DIMENSIONS TO BE CHECKED ON SITE BEFORE FABRICATION.
3. CONTRACTOR IS OBLIGED TO REPORT ALL ERRORS AND OMISSIONS TO DESIGNERS.
4. CONTRACTOR TO REFER TO ENGINEERS DWGS BEFORE PROCEEDING WITH WORKS.
5. ALL DRAWINGS AND DESIGNS ARE COVERED BY COPYRIGHT RIGHT, AND MAY NOT BE DISTRIBUTED, COPIED OR ISSUED WITHOUT WRITTEN PERMISSION OF THE DESIGNER.
6. ALL DESIGN CONCEPTS ARE SOLE PROPERTY OF THE DESIGNER AND NO ADAPTATIONS OR COPIES MAY BE MADE WITHOUT WRITTEN PERMISSION THEREOF.
7. THESE DRAWINGS ARE SUBJECT TO ANY VARIATION REQUIRED OR RECOMMENDATION BY ANY STATUTORY AUTHORITY, OR FOR THE BETTER CARRYING OUT OF THE WORKS. SAMPLES TO BE PROVIDED BY MAIN CONTRACTOR FOR DESIGNERS APPROVAL. ALL FINISHES TO DESIGNERS SATISFACTION. DESIGNER TO APPROVE ALL DRAWINGS PRIOR TO CONSTRUCTION.
8. THIS COPY HAS BEEN MADE BY OR WITH THE AUTHORITY OF THE DESIGNER PURSUANT TO SECTION 47 OF THE COPYRIGHT / DESIGNS AND PATENT ACT 1988. UNLESS THAT ACT PROVIDES A RELEVANT EXCEPTION TO COPYRIGHT, THE COPY MUST NOT BE COPIED WITHOUT THE PRIOR PERMISSION OF THE COPYRIGHT OWNER.

© Hugo Stock

7 Freemantle Gardens
Eastville
Bristol
AVON
BS5 6SZ

TEL: +44(0)7988 023882
Mail: hugostock@hotmail.co.uk

ROCKSTEADY TENTS

REVISIONS

NO.	DATE	DESCRIPTION	BY
01	05/03/25	INITIAL ISSUE	H.S.

Client: ROCKSTEADY TENTS

Project: 001

Title: 27m x 18m FLAT RIDGE BIG TOP

Date: 05/03/2025
Sheet Name: SHEET 1 OF 1
Scale: 1:250 @ A3
Drawing No.: 07-RST-001-001
Rev.: 01
Drawn By: HS
Checked By: ET
File Name: 07-001-001_01